USED ON
—

DWG NO. C-101168

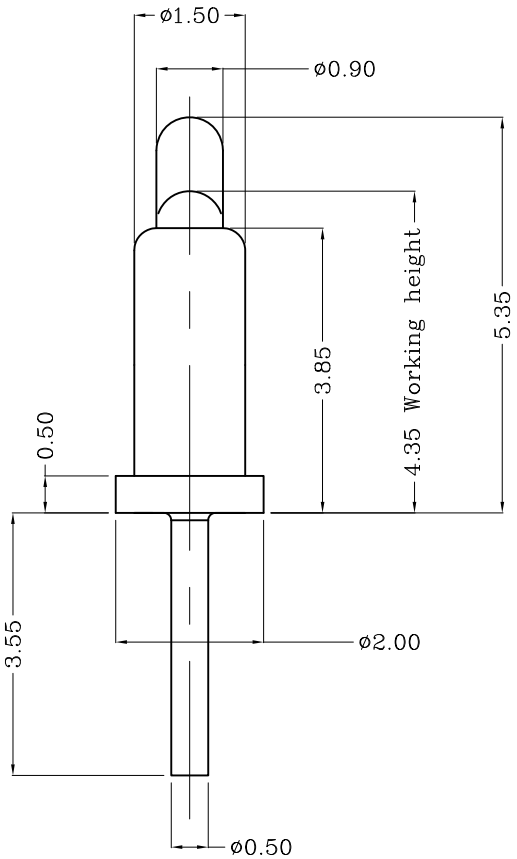

Notes:

1 Material(材质):
- 1)Body : Brass
- 2)Plunge : Brass
- 3)Spring : Stainless steel wire

2 Plating(电镀):
- 1)Body: Min 0.1um Gold plating over min. 1.4um Nickel plating (Body: 镀金0.1um Min 镍底1.4um Min)
- 2)Plunger: Min 0.4um Gold plating over min. 1.4um Nickel plating (Plunger: 镀金0.4um Min 镍底1.4um Min)

3 Mechanical(机械性能):
- 1)Force: 120^{+30}_{-20}gf per pin at 1.0mm stroke (力:下压1.0mm的力:120^{+30}_{-20}gf)
- 2)Total stroke(总行程) : 1.35mm
- 3)Durability(寿命): 10,000 cycle min.

4 Electrical(电性能)
- 1)Contact resistance(接触阻抗): 30mOhm Max.
- 2)Voltage rating(额定电压): 36V DC Max
- 3)Current rating(额定电流): 2.0A

TOP-LINK

101168-1
PART NUMBER

DIMENSIONS IN MM
TOLERANCES UNLESS OTHER SPECIFIED
0 = ±-
0.0 = ±0.15
0.00 = ±0.10
0.000 = ±
ANGLE: ±1°
SURF TEXTURE: 3.2
REMOVE BURRS. BREAK SHARP EDGES R0.05 MAX
DO NOT SCALE PRINT

MATL	HT TR	FIN
1	—	—

DWN	APVD	Top-Link Electronics Ltd.
CHK	REL	

NAME POGO PIN
PG-0.5-3.55-2.0-0.5-1.5-3.85-5.35

SCALE	DWG NO.	SHEET	REV
1:1	A4 C-101168	1 OF 1	C

LTR	REVISION RECORD	APVD	DATE
	NEW		2010/11/29

LOC -
DIST -

THIS INFORMATION IS CONFIDENTIAL AND IS DISCLOSED TO YOU ON CONDITION THAT NO FURTHER DISCLOSURE IS MADE BY YOU TO OTHER THAN TOP-LINK PERSONNEL WITHOUT WRITTEN AUTHORIZATION FROM TOP-LINK LTD.