USED ON

—

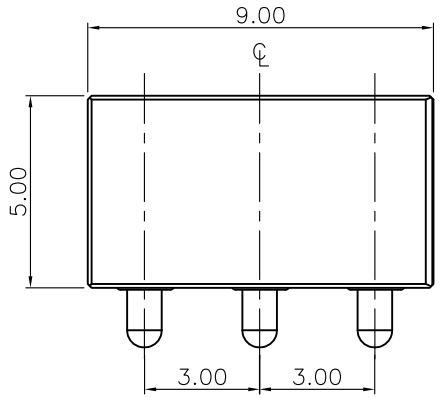

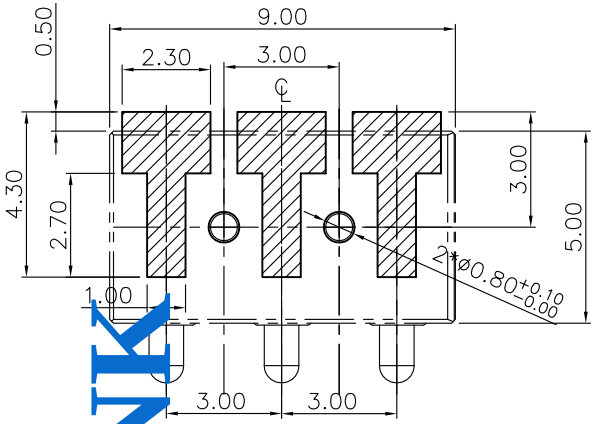

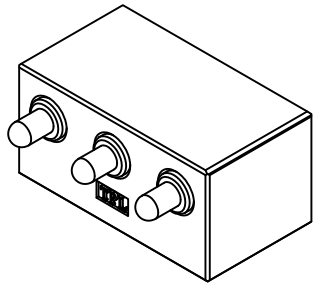

RECOMMEN P.C.B LAYOUT (Component Side)

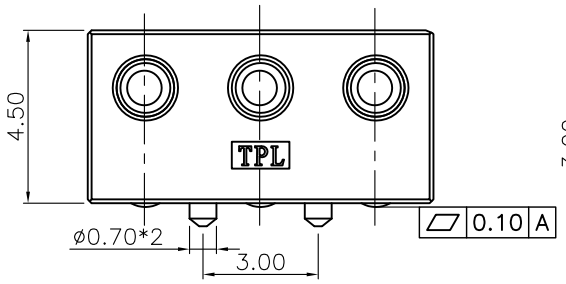

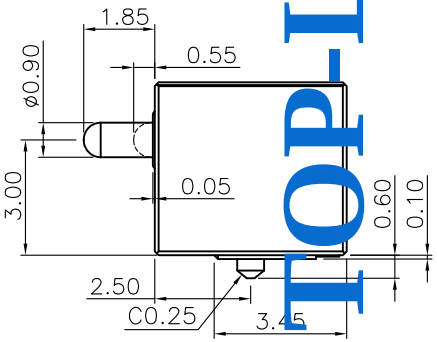

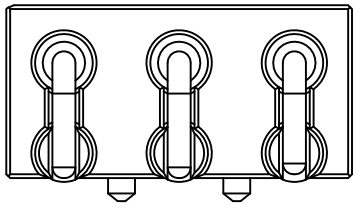

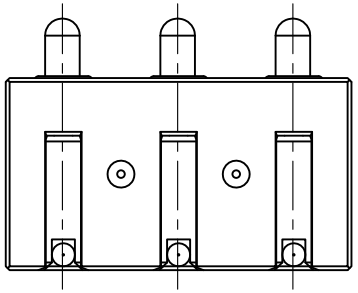

Notes:
1 Material, Housing: High temp.Plastic
Color Black.
Contact: Brass
2 Mechanical demands:
Plating Plunger: Min 0.4um Au over 1.4um Ni
Plating Body: Min 0.1Um Au over 1.4um Ni .

LTR	REVISION RECORD	APVD	DATE
	MEW		09'/2/4

DIMENSIONS IN MM
TOLERANCES UNLESS
OTHER SPECIFIED
0 = ±-
0.0 = ±0.15
0.00 = ±0.10
0.000 = ±
ANGLE: ±1°
SURF TEXTURE: 3.2
REMOVE BURRS. BREAK
SHARP EDGES R0.05 MAX
DO NOT SCALE PRINT

MATL —	HT TR —		FIN —
DWN Qin	APVD	top-link Electronics	Top-Link Electronics Ltd.
CHK	REL		
NAME POGO 3P Connector			
SCALE 4:1	A4	DWG NO. C-100466	SHEET 1 OF 1 / REV 1

100466-3

PART NUMBER

DWG NO. C-100466

LOC -

DIST -

THIS INFORMATION IS CONFIDENTIAL AND IS DISCLOSED TO YOU ON CONDITION THAT NO FURTHER DISCLOSURE IS MADE BY YOU TO OTHER THAN TOP-LINK PERSONNEL WITHOUT WRITTEN AUTHORIZATION FROM TOP-LINK LTD.

TOP-LINK