proposal

DWN No.: C-101752

Item	Part name	Q'ty/Ea'	Material	Finish
1	Body	1	Leaded Brass	Nickel plating
2	Plunger	1	Leaded Brass	Gold plating over Nickel plating
3	Spring	1	Stainless steel wire	————
4				
5				

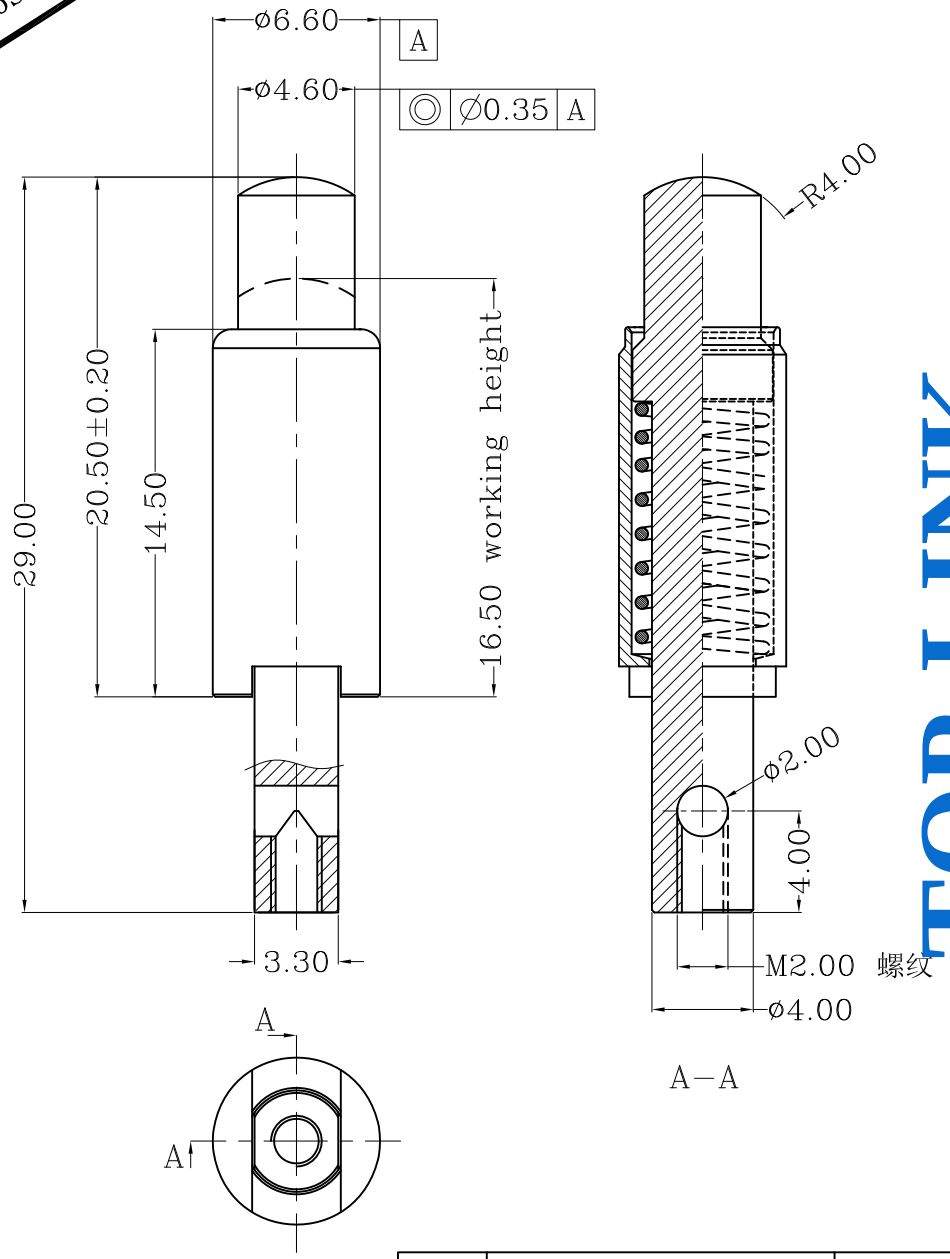

TOP-LINK

Table 1 Mechanical performance		
Working height	16.5mm	300gf Max<2.1>
Durability	500,000cycle	

Notes:
1 Dimensions shall be interpreted per ASME Y14.5M.
2 Mechanical performance(See the table 1)
<2.1>The force is the average of forces obtained when plunger goes downwards and upwards.
3 Electrical performance
Current rating: 10.0A
4 RoHS compliant.

2	Update	2016/02/20
1	NEW	2013/06/05
Rev.	Revision record.	Date.

DIST ---
DIST ---

Top-Link Electronics Ltd.
TOLERANCES UNLESS OTHER SPECIFIED
0. = ± –
0.0 = ± 0.15
0.00 = ± 0.10
0.000= ± –
Angle: ±1°
SURF TEXTURE: REMOVE BURRS.
BREAK SHARP EDGES R0.05 MAX.DO NOT SCALE PRINT.

Type: Customer drawing	Unit: mm		Weight: ————
DWN: Cai wanlu	APVD:	top-Link Electronics	Top-Link Electronics Ltd.
CHK:	REL:		
Name: Customer drawing			
Scale: 1:1	Size: A4	DWG No.: C-101752	Page: 1/1	Rev.: 2

101752-1
PART NUMBER

THIS INFORMATION IS CONFIDENTIAL AND IS DISCLOSED TO YOU ON CONDITION THAT NO FURTHER DISCLOSURE IS MADE BY YOU TO OTHER THAN TOP-LINK PERSONNEL WITHOUT WRITTEN AUTHORIZATION FROM TOP-LINK LTD.